2020 Product Guide
WALDEN
PREMIER

WOVEN WOOD MATERIALS REFERENCE

PATTERN CODE	PATTERN NAME	PRICE GROUP	EDGE BINDING	SLIDING PANEL	COORDINATED WAND COLOR	MAXIMUM SIZE FOR MOTORIZED SHADES (SQUARE FEET)	
						WITHOUT LINER	WITH LINER
E-432	Artisan Weave	D	Y	N	Bronze	44	38
E-416	Aspen Cedar	C	Y	Y	Bronze	44	38
E-416-3	Aspen Ebony	C	Y	Y	Black	44	38
E-082	Aspen Walnut	C	Y	Y	Bronze	44	38
E-416-4	Aspen White	C	Y	Y	White	44	38
E-R26	Bamboo Forest	B	Y	Y	Bronze	44	38
E-05B	Bamboo Leaf Brown	D	Y	Y	Bronze	44	38
E-365	Barcelona Café	B	Y	Y	Bronze	54	44
E-363	Barcelona Dusk	B	Y	Y	Black	54	44
E-861	Bora Bora	B	Y	Y	Beige	50	42
E-430	Capri Natural	C	Y	Y	Beige	64	56
E-389	Catalina	D	Y	Y	Beige	64	64
E-361	Devon Coffee	A	Y	Y	Bronze	56	45
E-E11	Devon Ivory	A	Y	Y	Beige	56	45
E-E06	Devon Maple	A	Y	Y	Beige	56	45
E-E02	Devon White	A	Y	Y	White	56	45
E-68N	Driftwood Natural	B	Y	Y	Beige	44	38
E-354	Jakarta Spice	C	Y	Y	Bronze	64	49
E-055	Java Cocoa	B	Y	Y	Bronze	54	44
E-55B	Kyoto Brown	B	Y	Y	Bronze	44	38
E-74D	Lattice Twilight	A	Y	Y	Black	54	44
E-B01	Mandalay Umber	C	Y	Y	Black	33	30
E-07M	Nassau Mahogany	D	Y	Y	Black	33	30
E-390	Natural Jute	D	Y	Y	Beige	64	56
E-403-B	Penang Oak	A	Y	Y	Bronze	56	45
E-427	Prairie Golden	D	Y	Y	Beige	64	56
E-828	Prairie Snow	D	Y	Y	Beige	64	56
E-428	Prairie White	D	Y	Y	Beige	64	56
E-001	Sakura Oregano	C	Y	Y	Bronze	54	44
E-352	Savanna Husk	C	Y	Y	Bronze	64	56
E-370	Sierra Sand	D	Y	N	Bronze	50	42
E-31C	St Martin Cappuccino	D	Y	Y	Bronze	44	38
E-438	Sunshade Brown	A	Y	Y	Bronze	54	48
E-10H	Sunshade White	C	Y	Y	White	44	38
E-394	Tamarind Sunset	B	Y	Y	Bronze	44	38
E-372	Tradewind Natural	D	Y	Y	Beige	56	45

All fabrics have a maximum width of 96".

EDGE BINDINGS

COLOR	COLOR NUMBER	WIDTH
NARROW EDGE BINDING		
Beige	N3	1"
Black	N10	1"
Chocolate	N4	1"
Copper	N5	1"
Cream	N8	1"
Desert Sand	N6	1"
Light Beige	N2	1"
Natural	N15	1"
Sienna	N11	1"
White	N1	1"
WIDE EDGE BINDING		
Beige	W3	3"
Black	W10	3"
Chocolate	W4	3"
Copper	W5	3"
Cream	W8	3"
Desert Sand	W6	3"
Light Beige	W2	3"
Natural	W15	3"
Sienna	W11	3"
White	W1	3"

Edge Binding on the face of the shade will be 1/2 the width above.

LINERS

COLOR NUMBER	COLOR
PRIVACY LINERS	
NK-L	Privacy Beige
NC-L	Privacy Chocolate
W4-L	Privacy White
BLACK-OUT LINERS	
K3-D	Black-Out Beige
C2-D	Black-Out Chocolate
W4-D	Black-Out White

Privacy Liners are the same color on both sides.

Black-Out Liners are off-white to the street.

SHADE STYLES

All standard shade styles operate with a cord lock and are supplied with cord cleats to keep the cords tidy and away from children or pets.

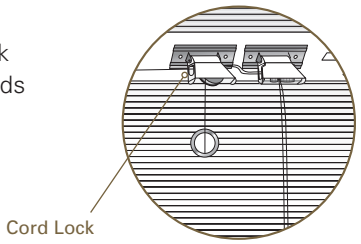

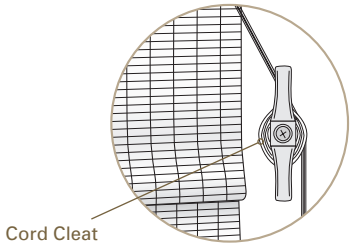

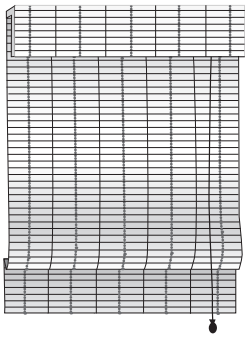

STANDARD ROMAN SHADE

Shade is raised by means of cords, which hang in front of the shade. Includes a 6" valance to conceal the components. When raised, the material rises from the bottom in flat folds.

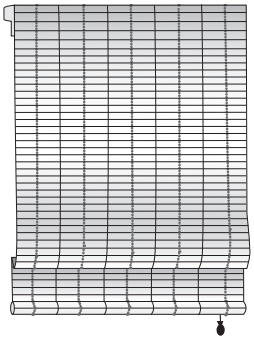

WATERFALL SHADE

Shade is raised by means of cords, which hang behind the shade. Material is attached to the front of the head rail, without a valance. When raised, the material rises from the bottom in flat folds.

Optional back valance is available upon request.

VALANCE RETURNS

All outside mount shades will be supplied with valance returns. Inside mount returns are also available free of charge if requested at the time an order is placed.

Standard valance returns are made using the shade material. Valance returns can also be made using edge binding material upon request; this is a surcharge option.

Standard valance return height will be 1½" less than the valance height. This length will keep the rolled bottom of the valance from interfering with the return.

Optional short valance returns are also available. Short returns cover the end of the head rail and hide the components, keeping the stack of the raised shade away from the returns.

Custom valance return lengths are available to be ordered upon request.

All valance returns will be made with an L-shaped connector to attach to the back of the valance. This holds the returns in place and creates a clean, finished corner.

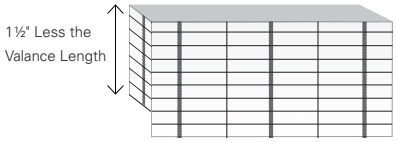

Standard Valance Return

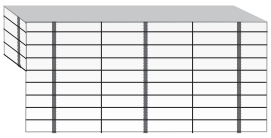

Short Valance Return

SHADE OPTIONS

LINERS

A liner can be ordered attached to the back of the shade or as a separately operable, movable liner (see Twin Shade below).

ATTACHED LINERS

Attached liners are available in privacy or black-out. They are secured to the back of the shade by stitches at each side of the liner. If a shade is lined, the valance will automatically be lined with the same material.

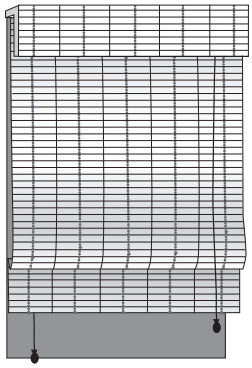

shown with controls on opposite sides

TWIN SHADE

Features two separate, independently operated shades on one head rail. The front shade can be either a standard or waterfall woven wood shade.

A separate liner shade is attached to the back of the head rail and both shades operate independently. Lift cords can be on the same side (factory standard) or opposite sides of the shade.

Outside mount twin shades will be made with a valance that is ¾" wider than the ordered shade width. This will allow the returns to fit behind the valance.

See Specifications for head rail sizes.

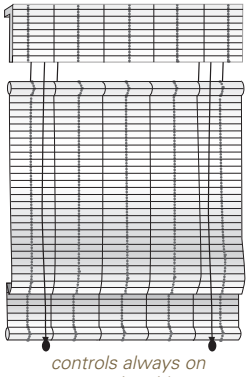

controls always on opposite sides

TOP-DOWN BOTTOM-UP SHADES

Top-Down Bottom-Up (TDBU) shades can be raised from the bottom or lowered from the top. This is accomplished with two separate sets of control cords positioned at opposite sides of the shade. Available with attached liners and edge binding.

To conceal the cord locks and pulleys each shade will be finished with a 6" lined valance. This is included in the TDBU surcharge.

Outside mount TDBU shades will be made with a valance that is ¾" wider than the ordered shade width. This will allow the returns to fit behind the valance.

The maximum width for TDBU shades is 84". TDBU shades are not available in waterfall style, or as multiple shades on one head rail.

MULTIPLE SHADES ON ONE HEAD RAIL

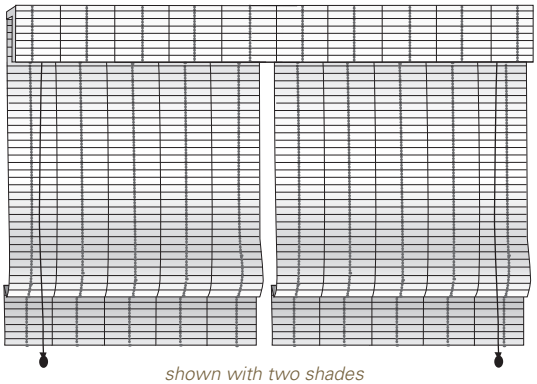

shown with two shades

Shades are available with 2-on-1 or 3-on-1 head rail. The maximum total width is 115" and the gap between shades will be no more than ½". The maximum width for a common valance is 96"; wider valances will be made in sections to match the individual shade widths.

Multiple shades on one head rail are available to be ordered with all control types except top-down bottom-up. Pay careful attention to make sure there are suitable locations for cord tensioners or cord cleats when specifying multiple shades on one head rail, particularly for the middle shade in 3-on-1 head rail units.

It is possible to operate two shades with just one clutch. A 2-on-1 shade can be specified with only one control on one side of the head rail. A 3-on-1 shade can be specified with only two controls, one on each side of the head rail.

SHADE CONTROL OPTIONS

CLUTCH CONTROL AND CONTINUOUS CORD LOOP (CCL)

Clutch controls are available with all shade styles except TDBU. All clutch control shades come with cord tensioners, which should be securely fixed to the wall to allow for the shade to operate freely and to keep dangerous hanging loops away from children and pets.

Cord loops are available in one foot increments from 2' to 8'. The factory will choose the length closest to $^{2}/_{3}$rds shade height, unless otherwise requested. Metal chain loops are available and can be made to custom lengths as a surcharge option.

The stack thickness on longer shades can interfere with both cord loop operation and cord tensioner installation, particularly for outside mount applications. We recommend ordering clutch control shades "cord adjacent;" this means the head rail and valance will be made $^{5}/_{8}$" wider than the shade on the control side allowing the chain to hang to the side of the shade. Please specify when ordering if you would like the shade to be completed as "cord adjacent."

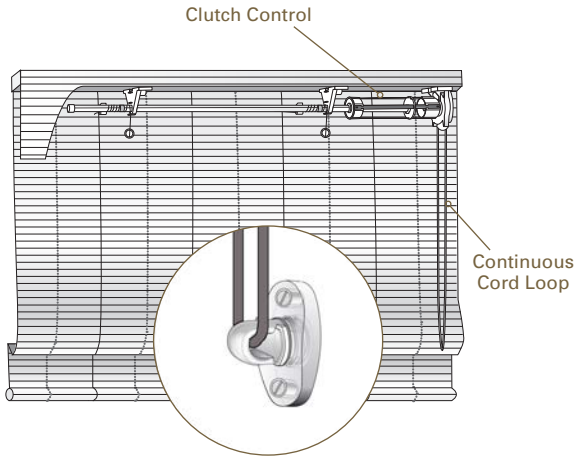

Cord/Chain Tensioner and Bracket

CORDLESS SHADES

Cordless shades operate with no lift cords on the front of the shade. The shade is lowered by pulling on the hem bar. A spring control system, located under the wooden head rail, holds the shade in place at any desired position.

Clear grips are added to the hem bar of cordless shades; one per shade up to 72" wide and two for wider shades.

The cordless option is not available on TDBU shades.

Cordless shades are available up to 96" wide and 96" long and will be mounted on standard depth head rails (see Specifications for details).

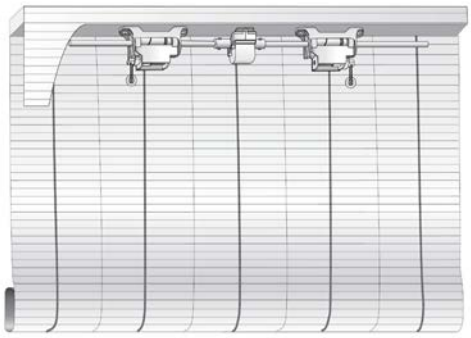
Cordless Shade

REMOTE CONTROL SHADES

Remote control motorized shades are powered by an internal lithium-ion battery. Operation of the shade is controlled by either a single- or multi-channel radio frequency remote.

The single-channel remote can operate up to 20 shades in one group, with a range of about 100 feet. The multi-channel remote has 15 channels and is recommended to operate shades of different lengths. Wall switches are also available.

The Connector Motor Hub brings automated capabilities to remote control motorized shades. Hubs operate through your wi-fi network and allow shade operation through smart phones and select smart home technologies.

The motor battery is recharged using an AC power adaptor, which plugs into a port in the motor head.

A solar panel charger alternative is also available; once properly installed it is a permanent power source. *See restrictions on page 13.*

Check the Materials Reference table for the maximum size of shade which can be operated by this battery motor.

AC Motors can be specified for larger shades. Please call for specifications/quotes.

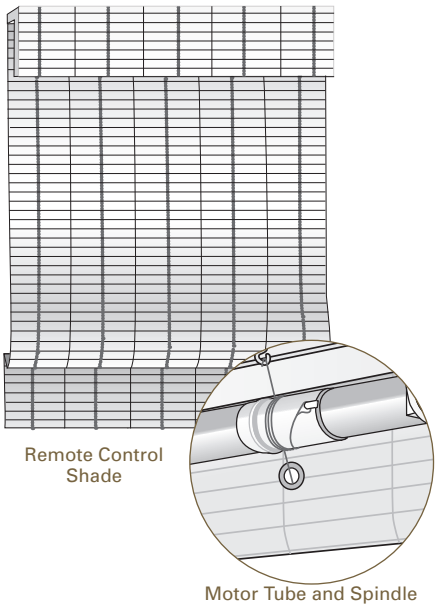
Remote Control Shade

Motor Tube and Spindle

SHADE CONTROL OPTIONS

WAND CONTROL SHADES

Wand control motorized shades are powered by the same internal lithium-ion battery as remote control shades. The motor is controlled using a wand which hangs down to the side of the shade.

Waterfall shades cannot be ordered with wand controls.

Wands are available in 4 lengths: 24", 36", 48" and 60".
Available colors include: white, beige, gray, bronze and black.
See image on page 13.

Wand control shade motor batteries are recharged via a mini USB power adaptor which plugs into the end of the wand.

Check the Materials Reference table for the maximum size of shade which can be operated by this battery motor.

All wand control shades will be made with the head rail and valance $^{5}/_{8}$" wider than the shade fabric on the control side allowing the wand to hang to the side of the shade. This may cause a light gap on black-out shades.

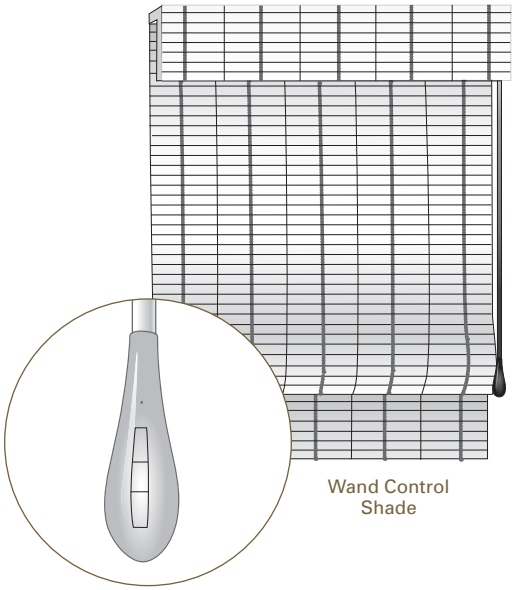

OUTSIDE MOUNT

The shade fabric will be made at the ordered width.

The head rail and valance will be **$^{5}/_{8}$" wider** on the control side.

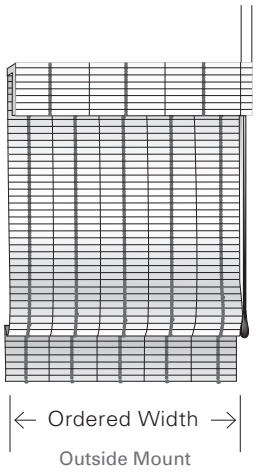

INSIDE MOUNT

The shade, head rail and valance will be made with a $^{3}/_{8}$" IB deduction.

The shade fabric will be cut an extra **$^{5}/_{8}$" narrower** on control side.

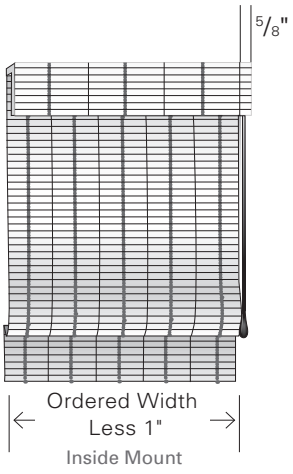

ADDITIONAL OPTIONS

LINED VALANCE

Lined valances are recommended to conceal the head rail components where an open-weave pattern is selected. All TDBU shades are made with lined valances as standard.

EDGE BINDINGS

Available in two widths: 1" (½" on the face of the shade) and 3" (1½" on the face of the shade).

Edge binding is applied to the sides of both the shade and valance. It is not applied to the bottom of either.

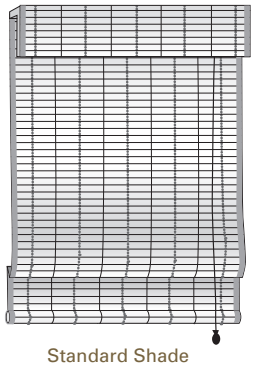

Standard Shade
shown with narrow edge binding

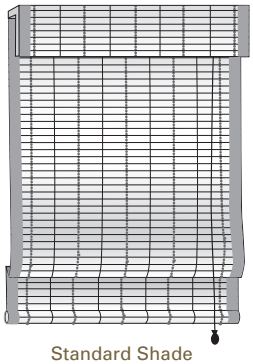

Standard Shade
shown with wide edge binding

CUT OUTS

Cut outs can be taken from either side of the shade. Please provide exact dimensions and the locations of cut outs required.

Cut outs are not available with edge binding.

There may be limitations to what can be cut out, based upon the size and specifications of the shade. The factory will review all orders for cut outs and provide confirmation of each order within 24 hours.

BRACKETS AND SPACER BLOCKS

Hold down brackets are supplied upon request.

Spacer blocks measuring 3/8" are available upon request. Maximum of 2 spacer blocks per bracket recommended.

SHADE SPECIFICATIONS

	MINIMUM WIDTH	MAXIMUM WIDTH	MINIMUM HEIGHT	MAXIMUM HEIGHT	IB DEDUCTION (WIDTH)	FLUSH IB DEPTH (top mount w/brkt)	MINIMUM IB DEPTH (top mount w/brkt)
STANDARD (CORDED)	12"	96"	18"	108"	3/8"	2½"*	¾"
NARROW HEAD RAIL (CORDED)	12"	96"	18"	108"	3/8"	2"*	¾"
STANDARD TWIN	12"	96"	18"	108"	3/8"	3¾"*	¾"
CLUTCH and CCL	18"	96"	18"	108"	3/8"	3¾"*	¾"
CORDLESS	18"	96"	18"	96"	3/8"	2½"*	¾"
TOP-DOWN BOTTOM-UP (TDBU)	12"	84"	18"	108"	3/8"	2½"*	¾"
MOTORIZED	23"	96"	18"	108"	3/8"	3¾"*	¾"
MULTIPLE SHADES ON ONE HR	–	115" total	–	–	–	–	–
COMMON VALANCE	–	96"	–	–	–	–	–

** Flush IB depth is head rail depth plus 1" when using standard bracket. Exact measurement will vary slightly based upon fabric thickness.*

BRACKET DIMENSIONS

Height: 1½"
Depth: 1¾"

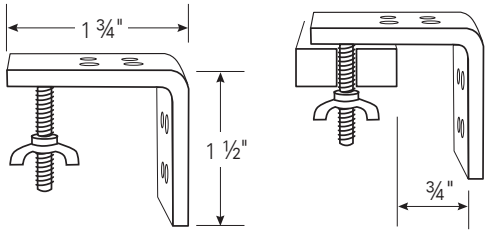

RING SPACING

Rings spaced 7" apart on shade back

STACK HEIGHT

Approximately (all lengths): 8" to 10"

HEAD RAIL DIMENSIONS

Middle support brackets will be supplied for all shades over 41" wide.

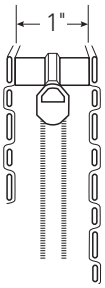

NARROW HEAD RAIL
(Custom Order Only)
- Standard Shades
- Waterfall Shades

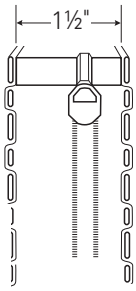

STANDARD HEAD RAIL
- Standard Shades
- Waterfall Shades
- TDBU Shades

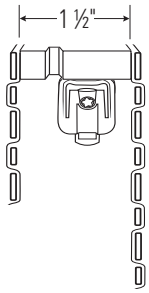

CORDLESS HEAD RAIL
- Standard Shades
- Waterfall Shades

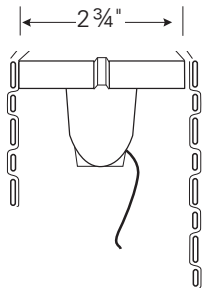

MOTORIZED HEAD RAIL REMOTE OR WAND CONTROL
- Standard Shades
- Waterfall Shades

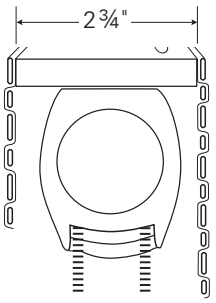

CLUTCH SHADE
with Continuous Cord Loop *(shown)*

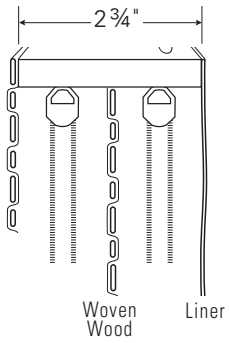

STANDARD TWIN SHADE
Controls Same Side *(shown)*
or Opposite Sides

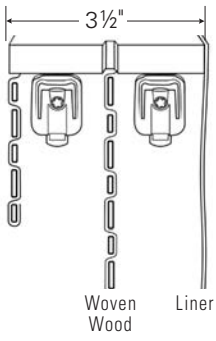

TWIN SHADE w/CORDLESS

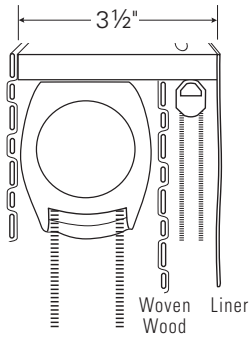

TWIN SHADE w/CLUTCH
(Clutch Control for Front Shade Only)
Controls Same Side *(shown)*
or Opposite Sides

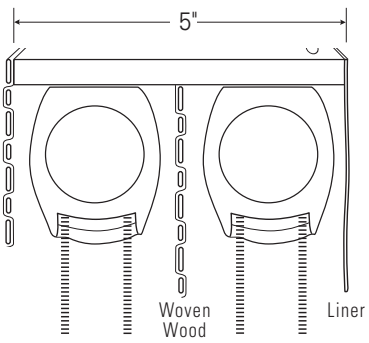

TWIN SHADE w/2 CLUTCHES
Controls Same Side *(shown)*
or Opposite Sides

SLIDING PANELS

Sliding panels provide a clean, contemporary look for large windows and doors. Overlapping panels are suspended from hangers, which glide smoothly on an aluminum track and pass in front of each other, allowing the panels to stack back away from the window. Check the Material Reference table for patterns which are available to be made as Sliding Panels.

The panels are supplied with narrow edge binding to protect them from wear and tear and are custom-sized, based on the ordered width and the number of panels. Sliding panels are operated with wood wands; a center opening sliding panel will have two wands.

NOTE: *Bamboo and natural materials can stretch or shrink, so we recommend that panels are ordered with at least ¾" clearance from the ground. Also, when shipped from the factory, panels may be slightly different lengths (up to ½" from the ordered length). Shorter panels can be made longer by gently pulling on the bottom of the panel until they are the same length as longer panels.*

NO CHARGE OPTIONS

ONE-WAY OPENING

When open, all of the panels stack back to either the right or the left. Specify on the order form which side of the window the panels will stack to.

NOTE: *If you want the panels to stack completely away from the window for an unobstructed view, allow for the panel width in the overall width of the shade. See "Specifications" for more details.*

The standard configuration is for the rear panel to be stationary and all the other panels stack in front of it. Reverse stacking is available upon request, with the front panel stationary. Free-floating panels are also available.

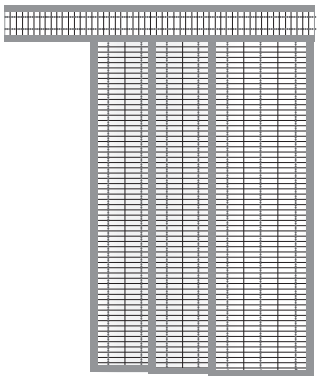

One-Way Right Stacked

CENTER OPENING

Center-opening (or split draw) sliding panels must be made with an even number of panels, and panels stack to both sides.

When made with four panels, the back left and front right panels are stationary. If made with six or eight panels, the rear panels on both sides will be stationary and all other panels will stack in front on both sides.

Reverse stacking and free-floating panels are also available.

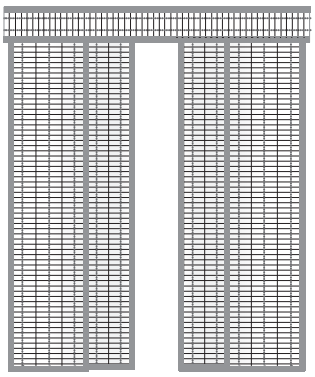

Center Opening

SLIDING PANEL SURCHARGE OPTIONS

LINERS

Available in privacy or black-out, and sewn under the edge binding on all four panel sides.

VALANCE

Valances are 8" long and attached to the front and sides of the track by velcro. If a valance is part of the original sliding panel order, the velcro for the valance will be riveted to the front of the track to ensure a lasting bond.

Valances are cut up the roll, so they wrap around the ends of the track. This means the valance material is rail-roaded and will be oriented differently to the panels. For inside mount sliding panels, the valance will cover the front of the track only. For outside mount sliding panels the valance will be made to wrap around both ends of the track.

When ordered separately, both velcro halves are provided, but the bond between the velcro and the track will not be as durable.

WIDE EDGE BINDING

Panels will come with narrow (1") edge binding as standard, which means that ½" is visible on the face of the panels. Wide (3") edge binding is also available in the same colors as a surcharge option.

SLIDING PANEL SPECIFICATIONS

SIZE LIMITATIONS

Minimum Width: 48" Minimum Height: 24"
Maximum Width: 192" Maximum Height: 120"

Tracks wider than 90" are spliced to avoid oversize freight charges.

STANDARD PANEL CONFIGURATIONS

WIDTH	TYPE OF OPENING	# OF PANELS	TRACK TYPE
48" – 84"	One-Way	3 Panels	3 Channel
	Center Opening	4 Panels	4 Channel
84 ¼" – 120"	One-Way	4 Panels	4 Channel
	Center Opening	4 Panels	4 Channel
120 ¼" – 144"	One-Way	5 Panels	5 Channel
	Center Opening	6 Panels	3 Channel

TYPICAL PANEL SIZES (OUTSIDE MOUNT SHADE)

WIDTH	ONE-WAY DRAW		CENTER OPENING	
60"	3 panels	21 5/8"	4 panels	16 7/8"
72"	3 panels	25 5/8"	4 panels	19 7/8"
84"	3 panels	29 5/8"	4 panels	22 7/8"
96"	4 panels	25 7/8"	4 panels	25 7/8"
108"	4 panels	28 7/8"	4 panels	28 7/8"
120"	4 panels	31 7/8"	4 panels	31 7/8"
132"	5 panels	28 3/8"	6 panels	24 1/8"
144"	5 panels	30 ¾"	6 panels	26 1/4"

PANEL SIZE CALCULATIONS

To calculate the approximate panel width, use the ordered width and the number of panels.

Deduct one from the number of panels and multiply this number by 2.5. Then add this number to the ordered width and divide the resulting number by the number of panels.

For example: *For a sliding panel order with an 80" width and 5 panels, each panel will be approximately 18" wide.*

5 (panels) - 1 = 4
4 x 2.5" = 10"
80" (ordered width) + 10" = 90"
90" / 5 (panels) = 18" panel width

TRACK DIMENSIONS

TRACK DEPTHS	
3 Channel	2"
4 Channel	2 ¾"
5 Channel	3 3/8"

The distance from the top of the track to the top of the panels is 1". The factory will take account of this distance when calculating the panel length.

MOUNTING DEPTHS

	3 TRACK	4 TRACK	5 TRACK
Minimum IB	2"	2 ¾"	3 3/8"
Flush IB	2 ½"	3 ¼"	3 7/8"

Wall or Face Mount: 1 ¾"" flat mounting surface required. (Using L Bracket)

INSIDE MOUNT DEDUCTIONS

IB Deduction (Width): ¼"
IB Deduction (Height): ½"

DISTANCE FROM THE WALL TO THE BACK OF THE TRACK (CLEARANCE)

	3-CHANNEL TRACK	4-CHANNEL TRACK	5-CHANNEL TRACK
Standard Bracket (2 7/8")	1 3/8"	1 ¼"	¾"
Large Bracket (4 ¼")	2 ½"	2 3/8"	1 7/8"

Adding an extension bracket will provide an extra 2 7/8" of clearance from the wall.

Add the track depth to the clearance to calculate the total projection into the room.

SLIDING PANEL BRACKET

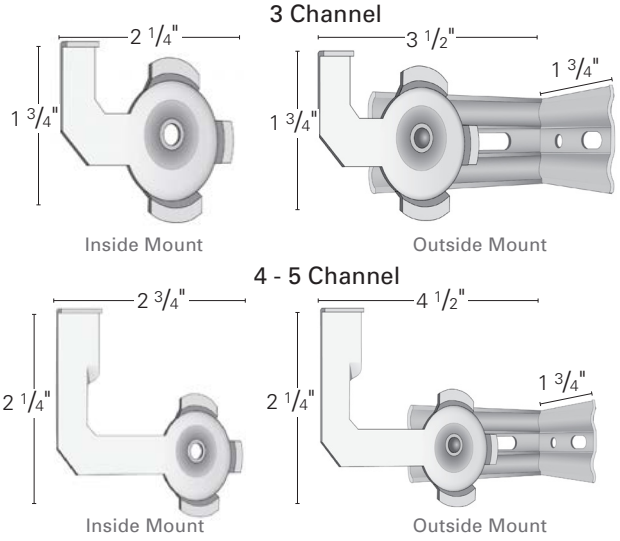

PRO DESIGN WOVEN WOOD WARRANTY

LIMITED LIFETIME WARRANTY

This product is warranted against defects in materials and workmanship, provided that:

1. The product was installed according to the product instructions.
2. Pro Design LLC recommendations were followed regarding limitations and specifications of the product.

Pro Design LLC reserves the right to determine if your shade warrants a repair or partial replacement of any parts. If necessary, Pro Design LLC will replace your shade with a new shade of equal or superior value. This shall be your sole remedy under this warranty.

This Limited Lifetime Warranty excludes all motors, controls and accessories that are warranted for only a period of five years from the date of purchase. Failure to follow the proper installation, charging and use instructions will invalidate the warranty for motors, remotes, wands and hubs.

This Limited Lifetime Warranty applies only to the original retail purchaser with proof of purchase.

This Limited Lifetime Warranty does not cover the removal or installation of original or replacement shades. This Limited Lifetime Warranty does not cover damage or defects caused by, or resulting from improper maintenance, neglect or improper use, wear and tear, abuse, neglect, accidents, alteration, commercial use, installation, removal or reinstallation or exposure to excessive moisture.

YOUR RIGHTS UNDER STATE LAW

These warranties give you specific legal rights. You may also have other rights which may vary from State to State. In no event shall Pro Design LLC be liable for incidental or consequential damages or for any other direct or indirect damage, loss, cost, expense or fee. Some states do not allow the exclusion or limitation of incidental or consequential damages, so the above limitation or exclusion may not apply to you. These warranties are exclusive and in lieu of all other obligations, liabilities, disclaimers, or warranties.

WALDEN
PREMIER

⚠WARNING

Window Blind Cord Can STRANGLE Your Child.
To prevent strangulation, purchase cordless products or products with inaccessible cords. ANSI/WCMA 5.1.3

⚠ADVERTENCIA

La cuerda ciega de la ventana puede ESTRANGULAR su niño.
Para evitar el estrangulamiento, compre alternativas inalámbricas o productos con cables inaccesibles. ANSI/WCMA 5.1.3

© 2020 Pro Design LLC • Office: 1-330-562-0023 • Fax: 928-447-1087 • sales@prodesignllc.net • www.prodesignllc.net